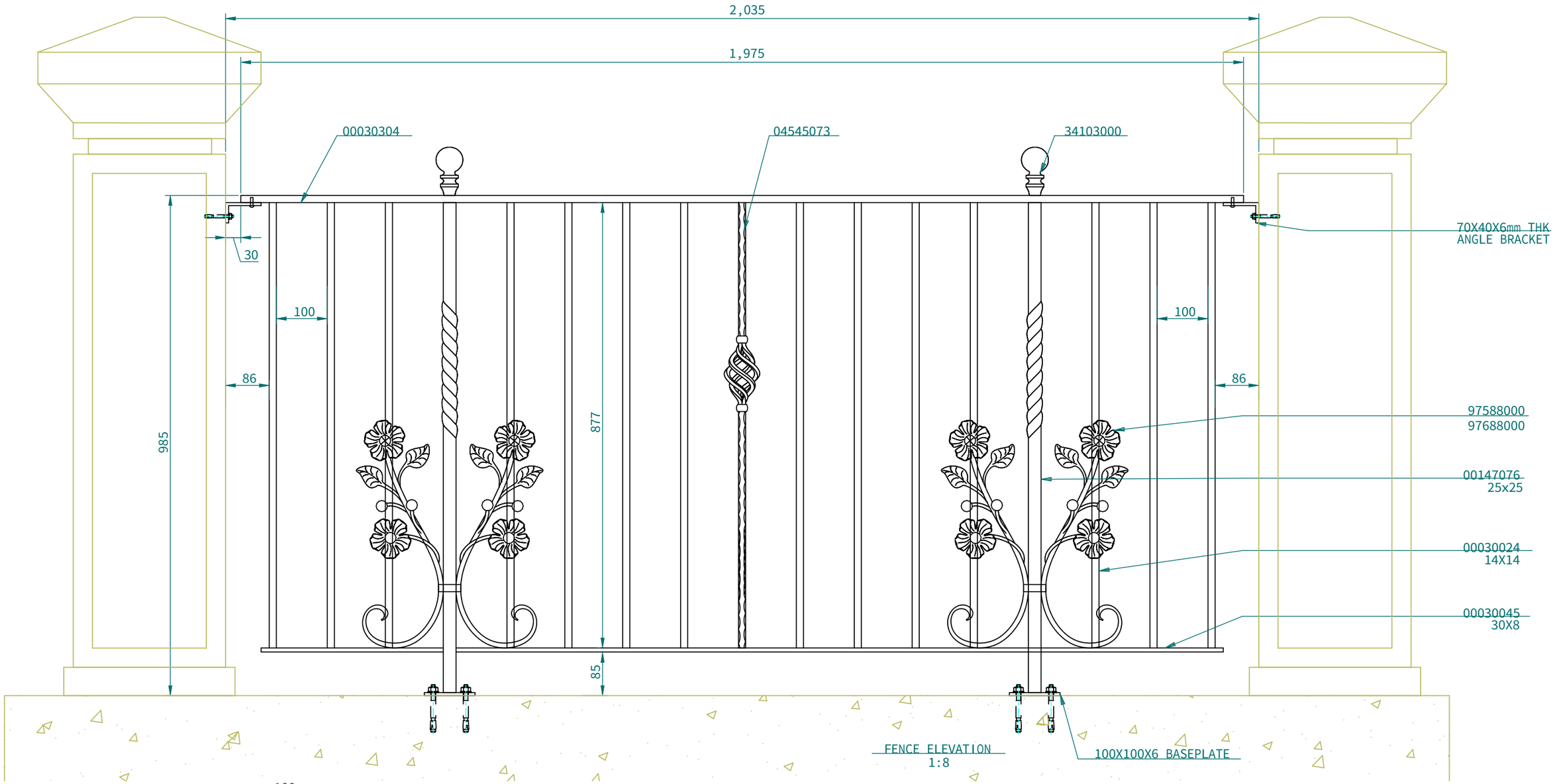

FENCE ELEVATION
1:8

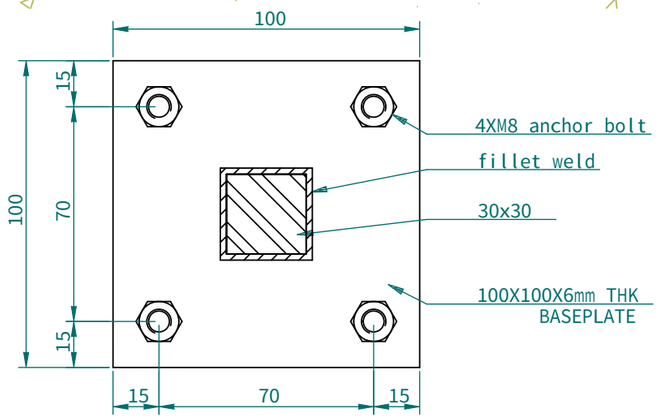

BASEPLATE FIX DETAIL
1:2

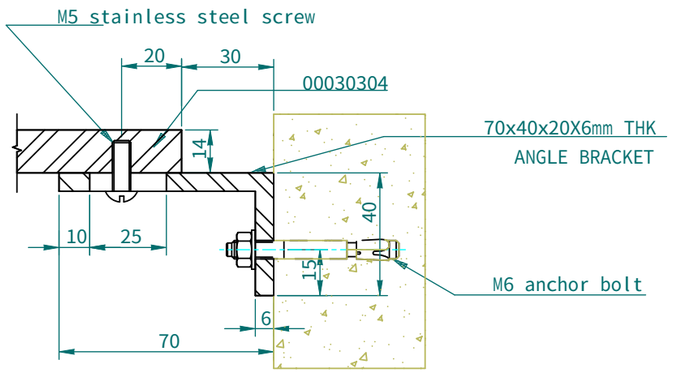

SIDE BRACKET FIX DETAIL
1:2

Object	Wrought Iron Fences	Scale	AS SHOWN
No	0116-2	Date	
Lecky Metal Ornaments Japan			