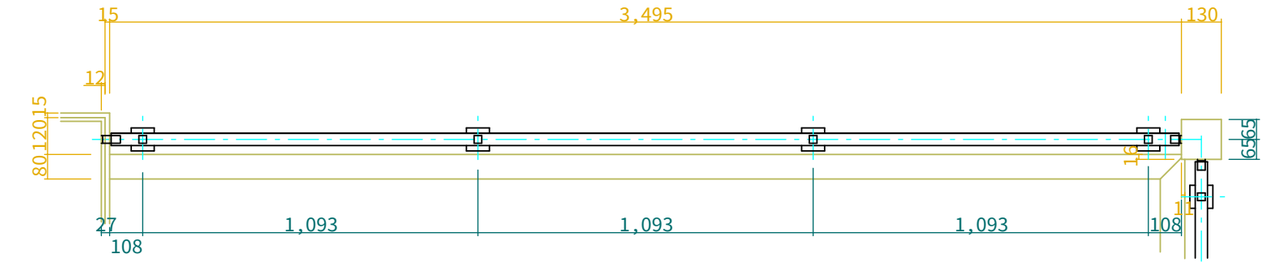

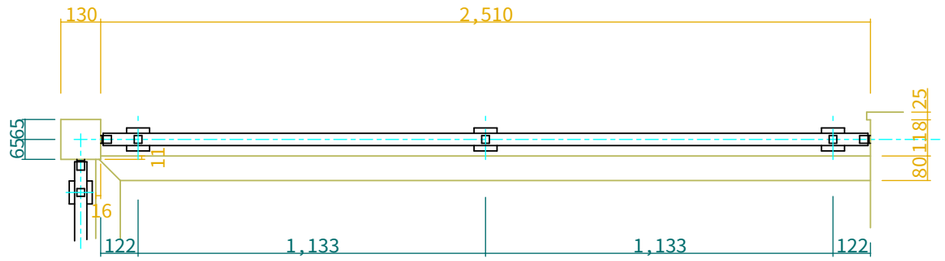

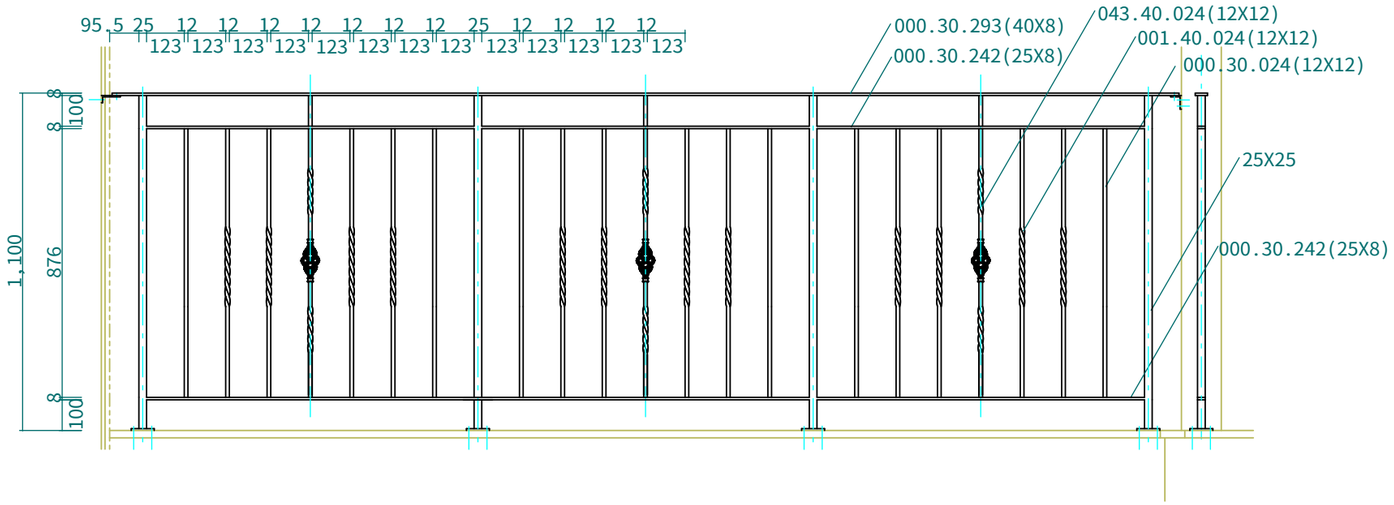

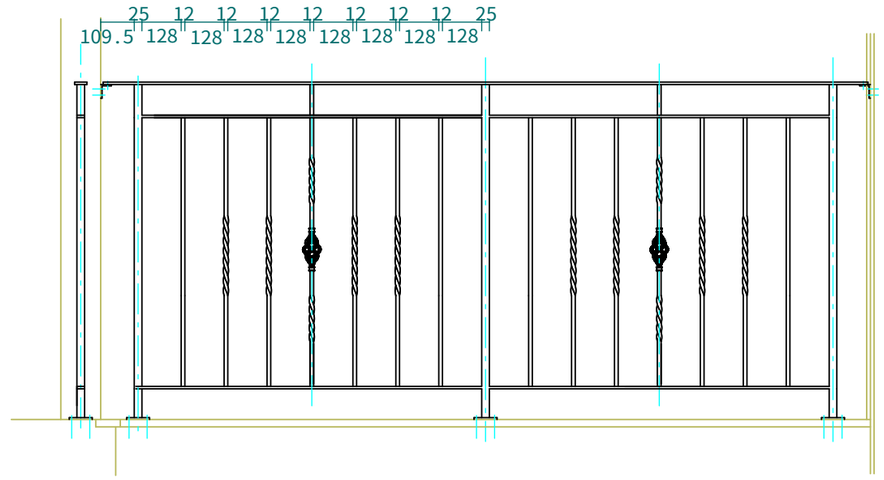

壁取付部詳細　S=1:2

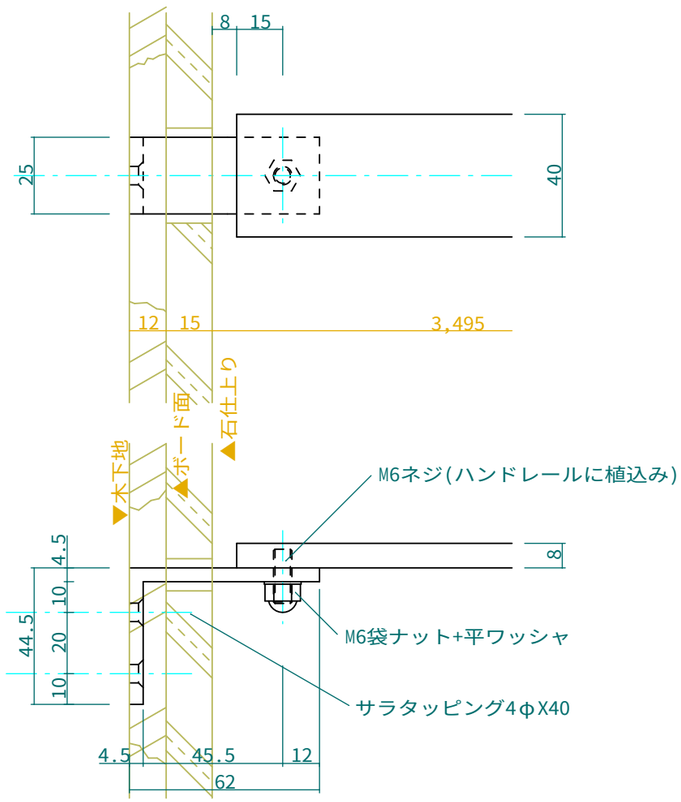

親柱下部詳細　S=1:2

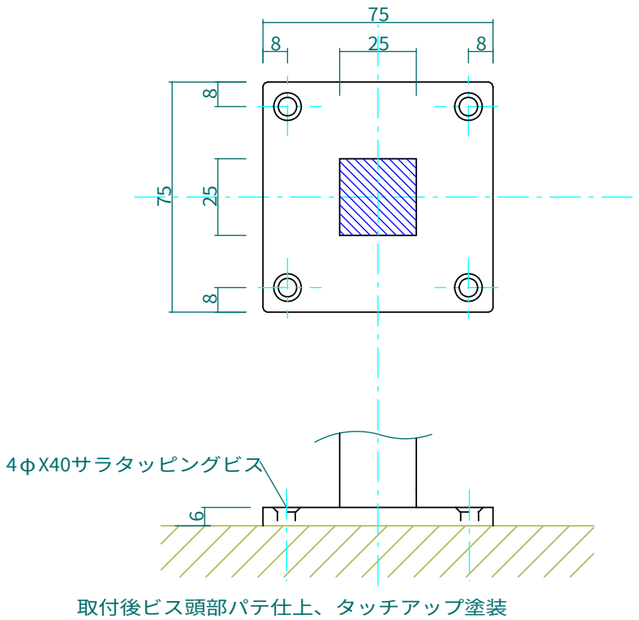

壁取付部詳細　S=1:2

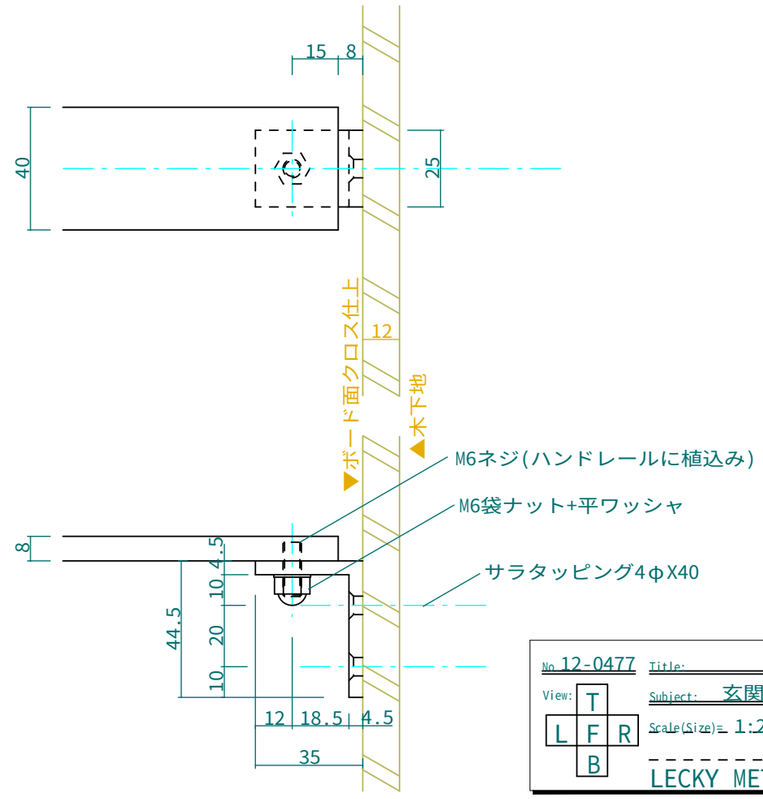

No. 12-0477	Title:
View: T L F R B	Subject: 玄関ホール吹抜け2Fロク手摺
	Scale(Size): 1:20(A3) Date: Sign: wtj
	LECKY METAL ORNAMENTS JAPAN