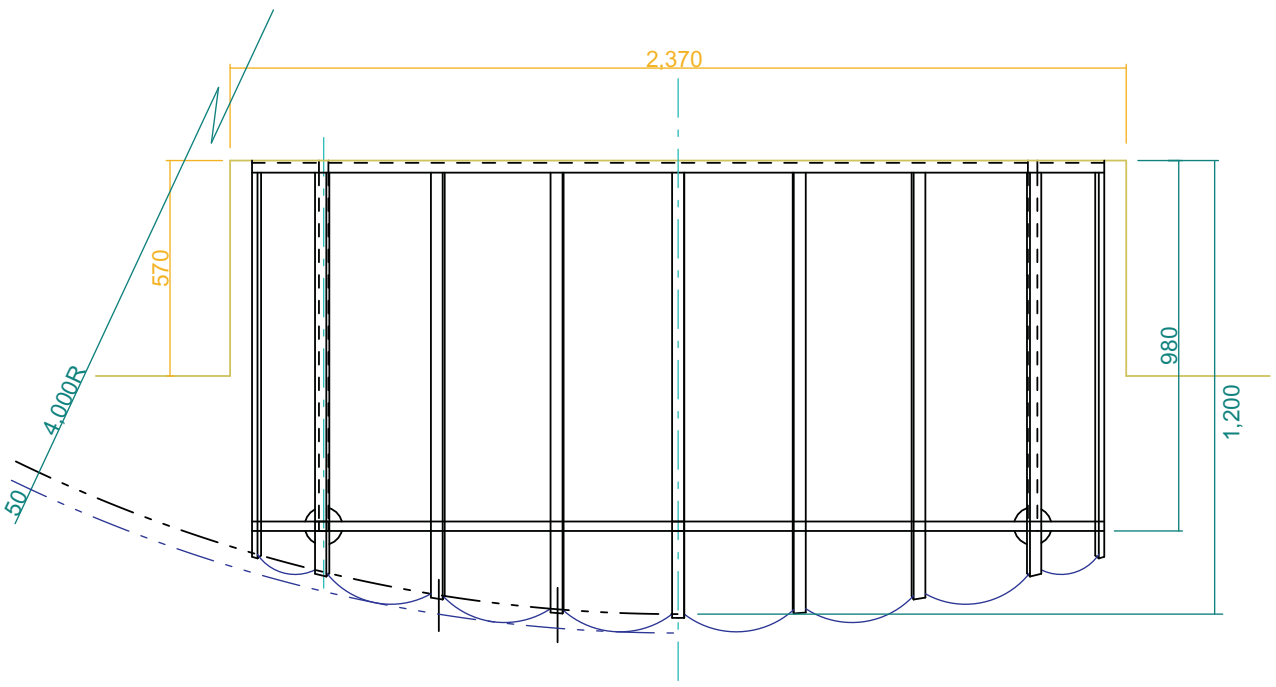

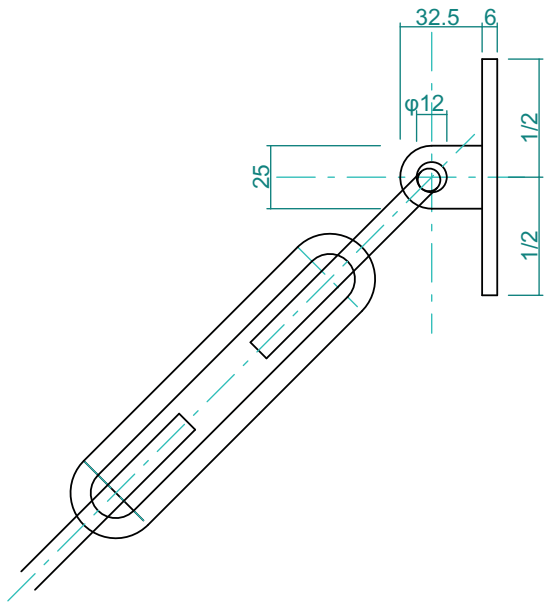

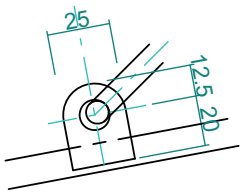

屋根板止め桟詳細　1:3

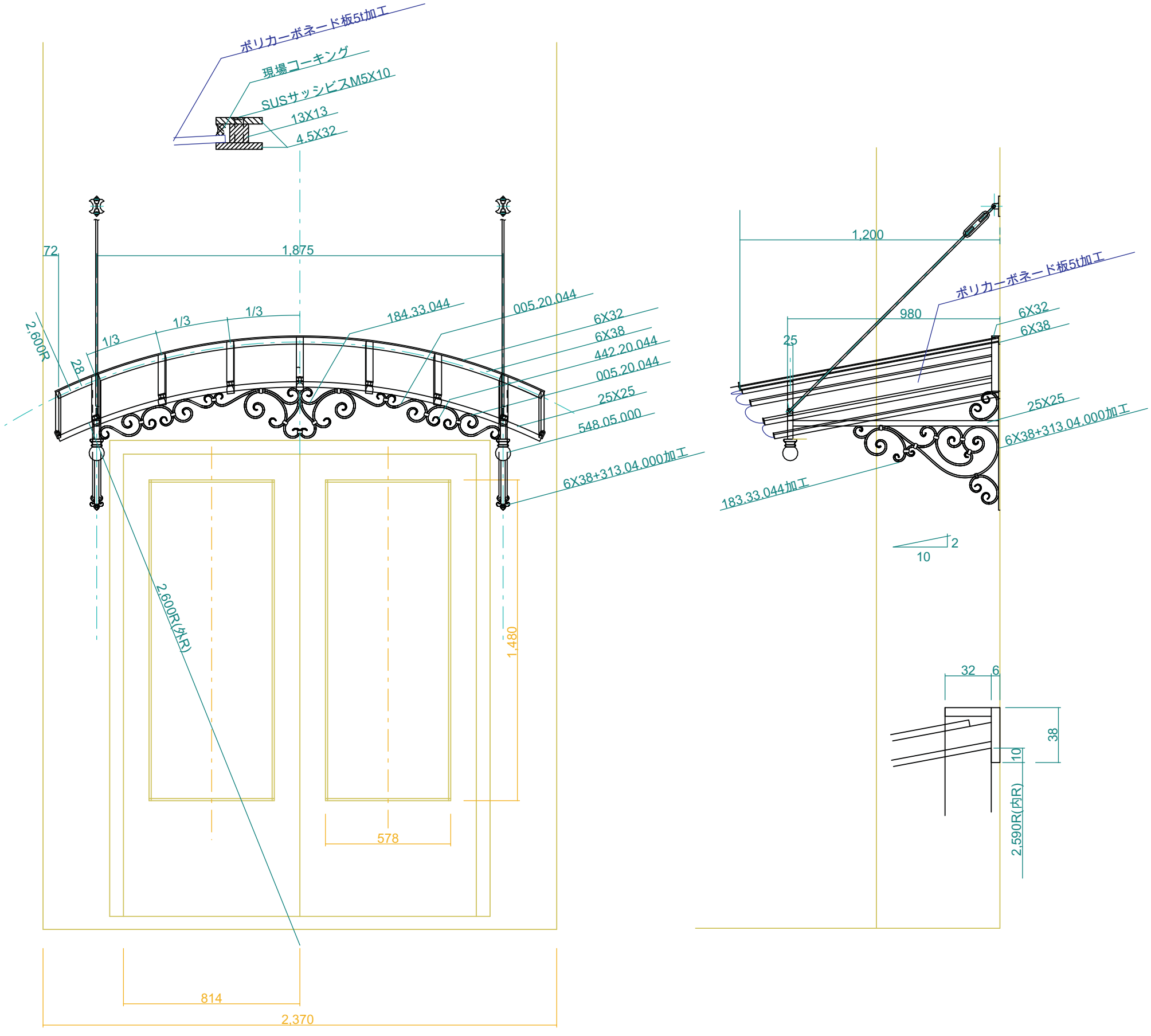

No.	Title:
View: T / L F R / B	Subject: 南面1F玄関庇
	Scale(Size): 1:20(A3)　Date:　Sign: wtj
	LECKY METAL ORNAMENTS JAPAN