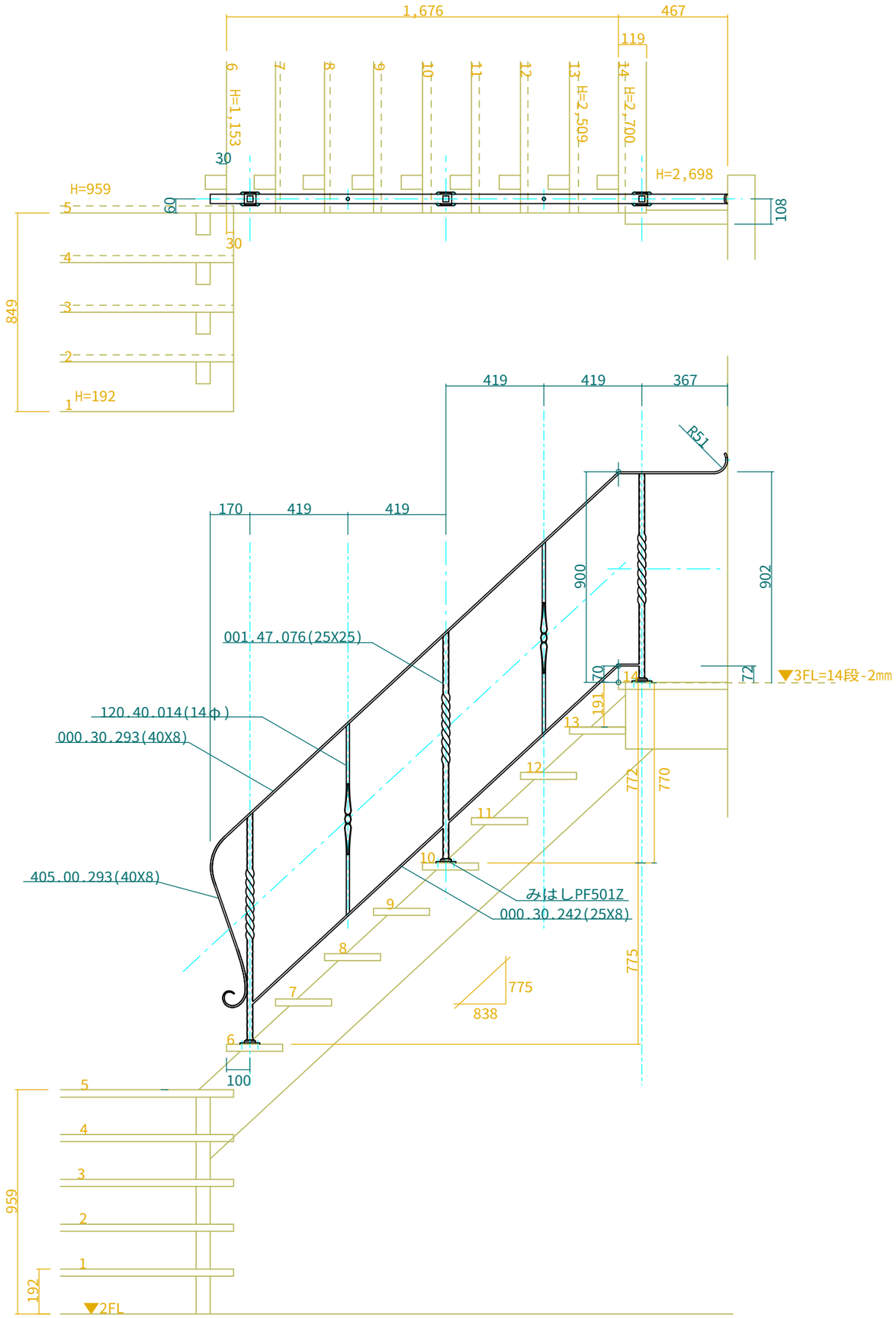

壁付部詳細　1:5

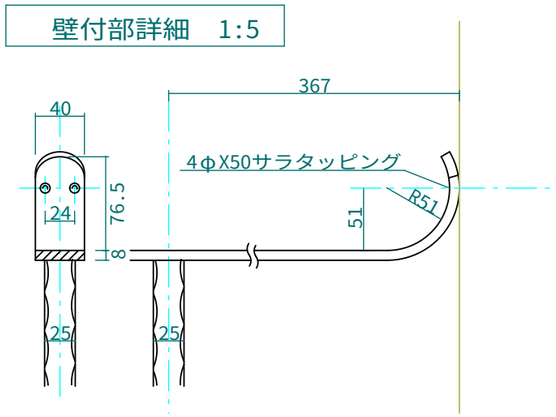

※　焼付塗装仕上(黒色3分ツヤ)

No. AA-01	Title:
View: T / L F R / B	Subject: 2-3F階段手摺
	Scale(Size): 1:20(A3) Date: Sign: wtj
	LECKY METAL ORNAMENTS JAPAN